UNIVERSITY OF CALCUTTA · Previous Year Question Paper

2026

MATHEMATICS — MDC

Paper: CC-8

(Discrete Mathematics)

Full Marks: 75

Typed & checked by PALMATHS (Biswadip Sir, Garia, Kolkata) from the original CU paper · More papers year-wise:
https://palmaths.com/cu-pyqs/2026/maths-mdc-sem-6-cc-8/

The figures in the margin indicate full marks.
Candidates are required to give their answers in their own words as far as practicable.

Group - A

[Graph Theory]
(Marks : 30)

Answer *any six* questions.

1. Define directed graph. Show that the sum of the degrees of all the vertices of a graph is an even number. **2+3**

2. Draw a graph with degree sequence 0, 3, 4, 4, 5, 5, 5. **5**

3. How many vertices are there in a graph with 15 edges if each vertex has degree 2? In a cricket tournament of 7 teams it is decided that each team will play with exactly 3 teams in the first round. Is it possible? Justify your answer. **2+3**

4. Let G be a connected graph such that each vertex is of degree 2. Prove that G is a cycle. **5**

5. (a) Show that a connected graph is Eulerian if every vertex has even degree.

(b) For which values of n, the complete graph K_n is an Eulerian graph? $(4 \leq n \leq 20)$. **3+2**

6. Draw a tree having 13 vertices with 9 vertices of degree 1, 3 vertices of degree 4 and one vertex of degree 3. Is it possible to draw a tree with six vertices having degrees 1, 2, 3, 4, 4, 6? **5**

7. Show that a tree T with n number of vertices has $(n-1)$ edges. **5**

8. (a) Does the graph have a Hamilton path? If so find such a path.

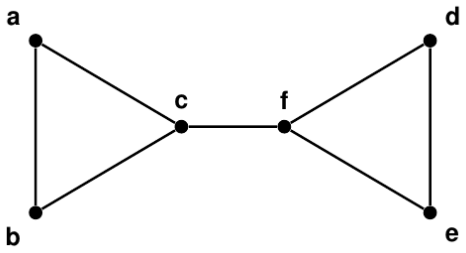

(b) Give an example of a graph that has neither an Eulerian circuit nor a Hamiltonian circuit. **3+2**

9. If G is a connected planar graph with $n\ (\geq 3)$ vertices and e edges, then prove that $e \leq 3n-6$. Also prove that the converse of the result is not always true. **3+2**

© PALMATHS.

10. Let G be a connected planar graph with n_v vertices, n_e edges and n_f faces. Then show that $n_v - n_e + n_f = 2$. **5**

Group - B

[Application of Congruence, Combinatorics, Recurrence Relation and Generating Functions]
(Marks : 35)

Answer *any seven* questions.

11. Prove that $3a^2 - 1$ is never a perfect square. **5**

12. (a) Find the remainder when $9 \cdot 4^{24} + 2 \cdot 9^{35}$ is divided by 5.

(b) Use Wilson's Theorem to show that $28! + 233 \equiv 0 \pmod{29}$ **2+3**

13. Find the integers u and v if $\gcd(1820, 231) = 1820u + 231v$. **5**

14. Use Fermat's theorem to prove that :

$$1^{p-1} + 2^{p-1} + 3^{p-1} + \cdots + p^{p-1} \equiv (-1) \pmod{p},$$

when p is an odd prime. **5**

15. (a) Use congruence to find the unit digit of 2027^{2027}.

(b) Check whether the ISBN number 81-203-1147-3 is correct or not. **2+3**

16. (a) Show that 7937523 is divisible by 9.
(Answer should be given without directly dividing the number by 9)

(b) How many moves to be required in case of 'The tower of Hanoi' problem for 3 disks? **2+3**

17. Construct a time-table for the Round-Robin tournament of 7 teams. **5**

18. Calculate the last digit of the VISA Card 4123 4567 8901 234___. **5**

19. Find the n-th term of the Fibonnacci sequence $1, 1, 2, 3, 5, 8, 13, 21, 34, \ldots$. **5**

20. Solve the recurrence relation $a_n = a_{n-1} + 2a_{n-2}$ with initial condition $a_0 = 0$, $a_1 = 1$. **5**

21. There is a school class of 25 people made up of 11 boys and 14 girls.

(a) How many ways are there to make a committee of 5 people?

(b) How many ways are there to pick a committee of all girls?

(c) How many ways are there to pick a committee of 3 girls and 2 boys? **1+1+3**

22. Find the generating function for the sequence $\{7, 8, 9, 10, \ldots\}$. **5**

Group - C

[Boolean Algebra]
(Marks : 10)

Answer *any two* questions.

23. (a) In a Boolean algebra B if $b + a = c + a$ and $b \cdot a = c \cdot a$ for $a, b, c \in B$, then show that $b = c$.

(b) Show that $a + ab = a$ for all $a, b \in B$. **3+2**

PALMATHS

24. Construct the truth table for the switching function f represented by the Boolean function $f(x,y,z) = xyz + x'(y+z)$. **5**

25. Let $f(x,y,z) = x + y \cdot z'$ be a Boolean function. Express $f(x,y,z)$ in CNF. What is its DNF? **3+2**

26. Obtain a Boolean expression which represents the following circuit. Moreover draw an equivalent circuit as simple as you can : **5**

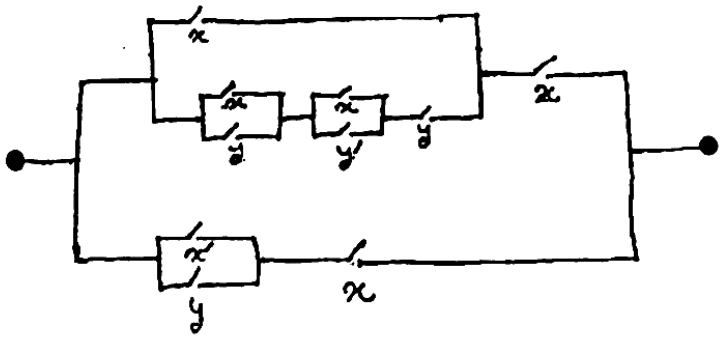

PALMATHS